集成电路原理与设计
4.器件模型二

赵梦恋
zhaoml@zju.edu.cn

Syllabus

课数	内容	课数	内容
1	导论	9	放大器
2	工艺流程	10	放大器
3	器件模型	11	逻辑门
4	模拟基本单元	12	组合逻辑
5	电流镜与基准	13	时序逻辑
6	单级放大器	14	加法器/乘法器
7	放大器	15	集成电路专题讲座一
8	课堂测验	16	集成电路专题讲座二

Outline

- Review：Diodes
- MOS I/V Characteristics
- MOS Device Models
  - MOS Device Capacitances
  - MOS Small-Signal Model
- MOS Short-Channel Effect
- MOS SPICE Models

MOS Device Layout

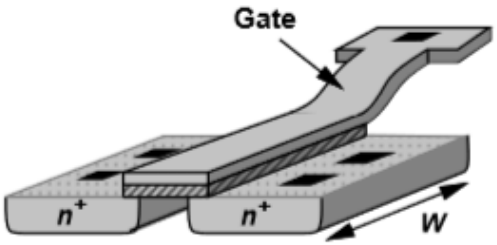

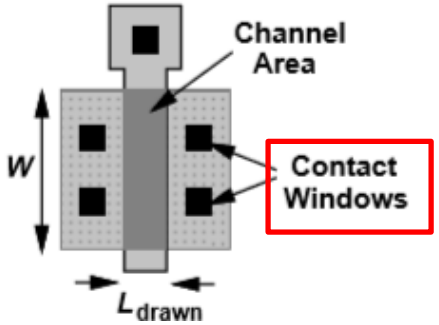

- The gate polysilicon, S/D terminals must be tied to metal (aluminum) wires that serve as interconnects with low resistance and capacitance.
- To minimize the capacitance of the source and drain, the total area of each junction must be minimized.

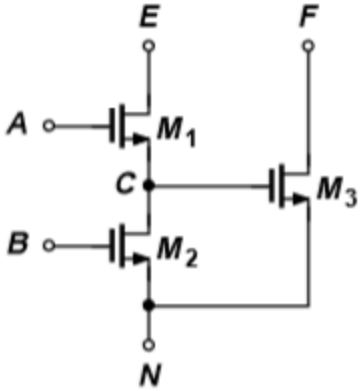

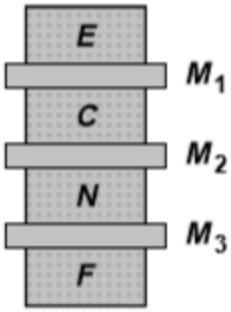

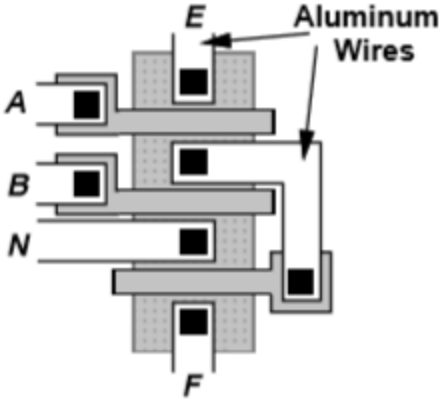

MOS Device Capacitance

To predict high-frequency behavior

- C_{BD} and C_{BS}
  associate with the back-biased depletion region between the drain and substrate and the source and substrate
- C_{GD}, C_{GS} and C_{GB}
  be all common to the gate and **are dependent on the operating condition of the transistor**

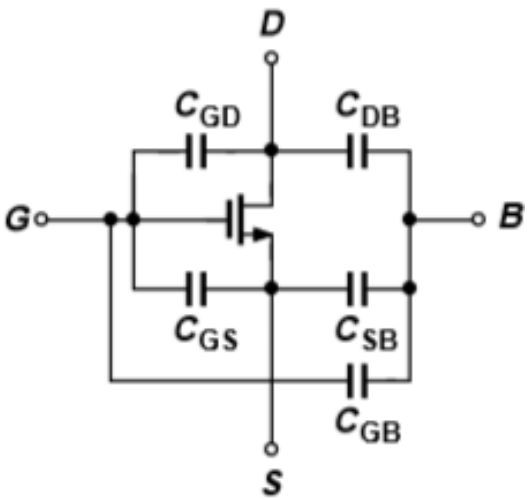

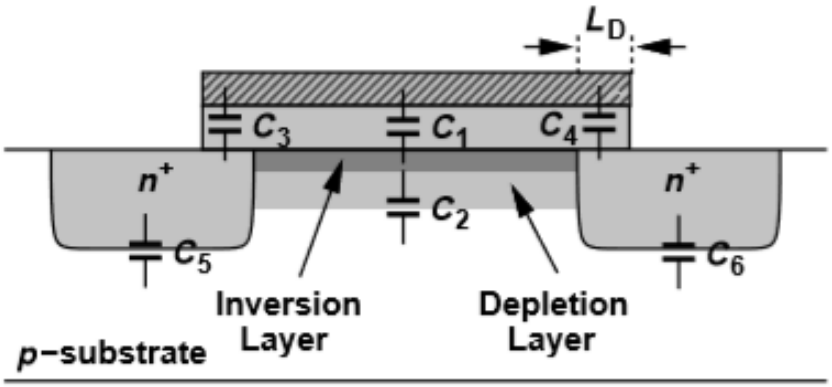

MOS Device Capacitance: Depletion Cap

$$C_j = \frac{C_{j0}}{\left[1-\left(\frac{V_d}{\varphi_0}\right)\right]^m} \qquad C_{j0} = \sqrt{\frac{q\varepsilon_{si}(N_A+N_D)}{2\varphi_0}} \qquad \varphi_0 = \frac{kT}{q}\cdot\ln\left(\frac{N_A N_D}{n_i^2}\right) \qquad m=0.3\sim0.5$$

-- Capacitance per area

pp.10, 3.器件模型I_2024.pdf

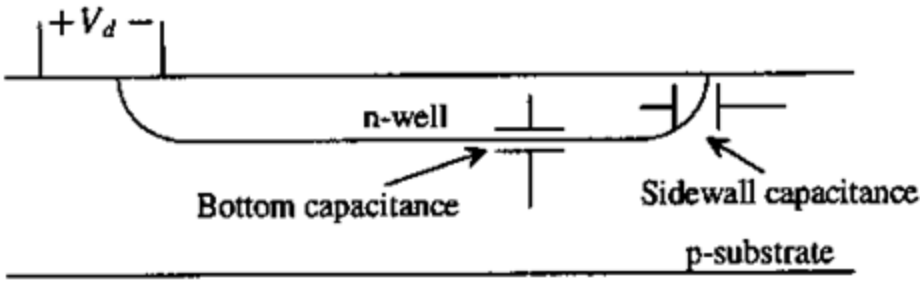

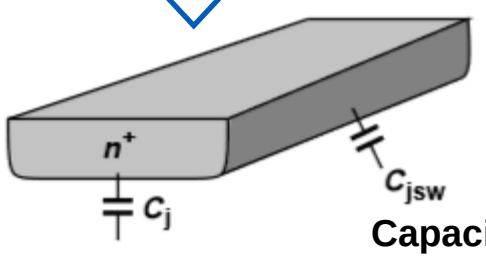

Capacitance per area: F/m²

Capacitance per perimeter: F/m

$$C_{BX} = \frac{(CJ)(AS)}{\left[1-\left(\frac{v_{BX}}{PB}\right)\right]^{MJ}} + \frac{(CJSW)(PS)}{\left[1-\left(\frac{v_{BX}}{PB}\right)\right]^{MJSW}}$$

Bottom-plate Capacitance ***(per area)***

Side-wall Capacitance ***(per perimeter)***

X: “S” or “D”
AS=area of the source
PS=perimeter of the source
CJSW=zero bias, bulk-source sidewall capacitance
MJSW=bulk-source sidewall grading coefficient

MOS Device Capacitance: Depletion Cap

C_{BD} and C_{BS}

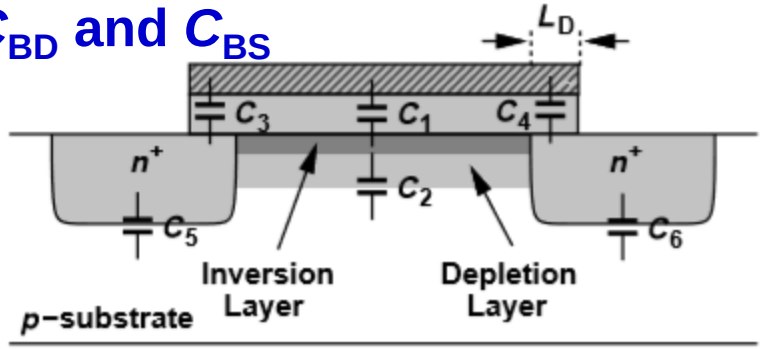

C_5、C_6: the junction capacitance between S/D areas and the substrate

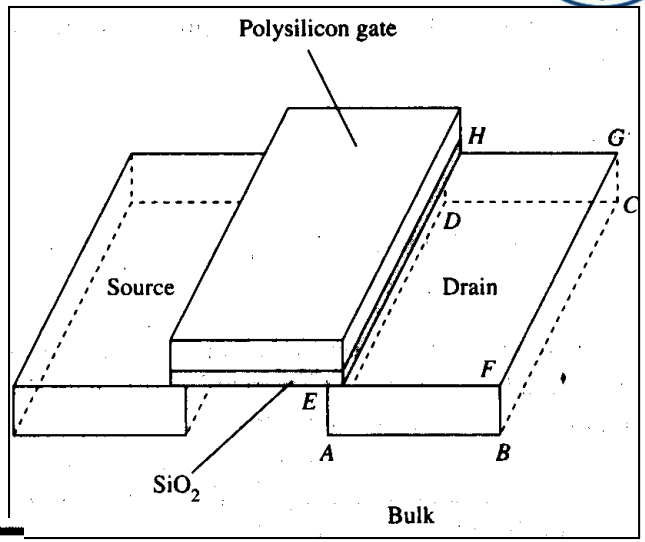

Type	p-Channel	n-Channel	Units
CGSO	220×10^{-12}	220×10^{-12}	F/m
CGDO	220×10^{-12}	220×10^{-12}	F/m
CGBO	700×10^{-12}	700×10^{-12}	F/m
CJ	560×10^{-6}	770×10^{-6}	F/m^2
CJSW	350×10^{-12}	380×10^{-12}	F/m
MJ	0.5	0.5	
MJSW	0.35	0.38	

Bottom: ABCD=EFGH
Sidewall: ABFE+BCGF+ DCGH+ADHE
=> perimeter: EF+FG+GH+HE

A typical S/D: 1.8μm × 5μm
C_{BX} of N-Channel: 12.1fF
C_{BX} of P-Channel: 9.8fF.

C_2: the channel-to-bulk capacitance $C_{2,j0} = \sqrt{\frac{q\varepsilon_{si}N_{sub}}{4\varphi_F}} \times WL$

MOS Device Capacitance: Dep Cap-Example

Example Calculate the source and drain junction capacitance of the transistor

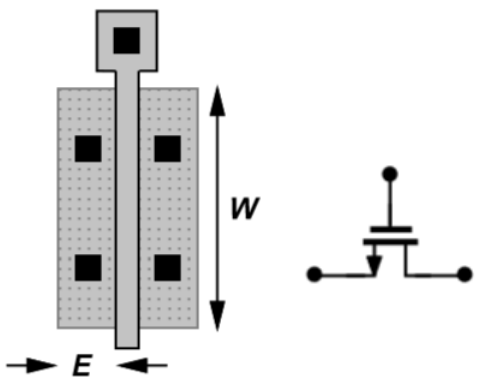

$$C_{DB} = C_{SB} = WEC_j + 2(W+E)C_{jsw}$$

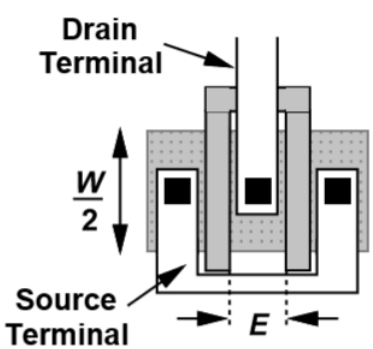

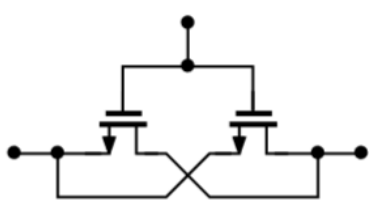

$$C_{DB} = \frac{W}{2}EC_j + 2\left(\frac{W}{2}+E\right)C_{jsw}$$

$$C_{SB} = 2\left[\frac{W}{2}EC_j + 2\left(\frac{W}{2}+E\right)C_{jsw}\right]$$

$$= WEC_j + 2(W+2E)C_{jsw}$$

- *How to reduce the drain junction capacitor of MOS ?*

MOS Device Capacitance: Charge-storage Cap

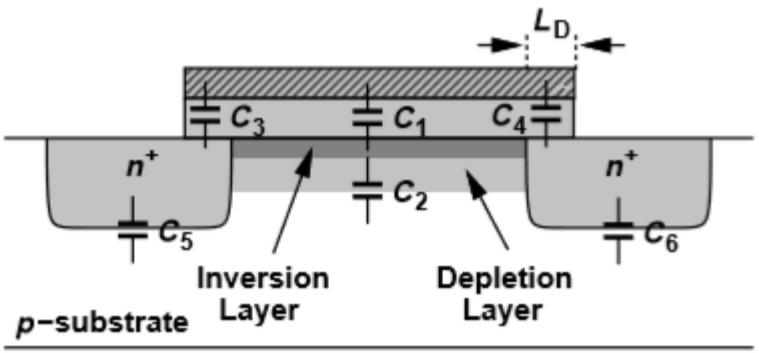

C_1: gate-to-channel capacitance

$$C_1 = W_{eff}(L-2L_D)C_{ox} = W_{eff}L_{eff}C_{ox}$$

C_3/C_4: overlap capacitances between G and S/D 交叠电容

$$C_3=C_4\approx(LD)(W_{eff})\ C_{ox}=(CGXO)W_{eff}$$

$=C_{OV}W$ X: “S” or “D”

Type	p-Channel	n-Channel	Units
CGSO	220×10^{-12}	220×10^{-12}	F/m
CGDO	220×10^{-12}	220×10^{-12}	F/m
CGBO	700×10^{-12}	700×10^{-12}	F/m
CJ	560×10^{-6}	770×10^{-6}	F/m^2
CJSW	350×10^{-12}	380×10^{-12}	F/m
MJ	0.5	0.5	
MJSW	0.35	0.38	

MOS Device Capacitance: C_{GS}, C_{GD}, C_{GB}

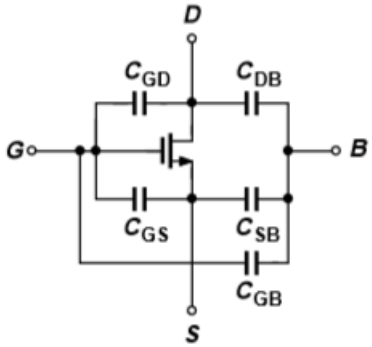

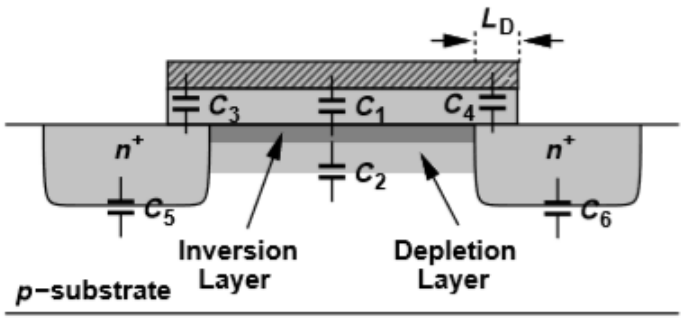

Cutoff region

$C_{GS}=C_3$

$C_{GD}=C_4$

$C_{GB}=C_1//C_2$

Triode region

$C_{GS}=C_3+1/2\cdot C_1$

$C_{GD}=C_4+1/2\cdot C_1$

Saturation region

$C_{GS}=C_3+2/3\cdot C_1$

$C_{GD}=C_4$

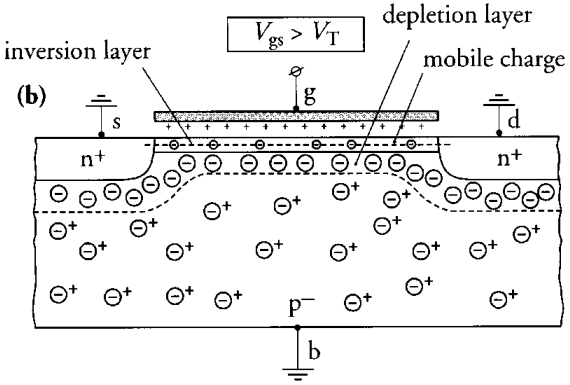

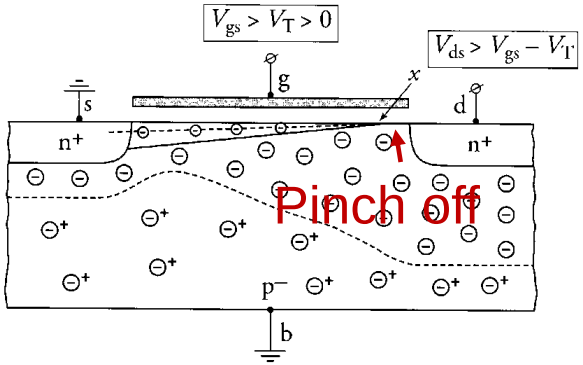

MOS Device Capacitance: C_{GS}, C_{GD}, C_{GB}

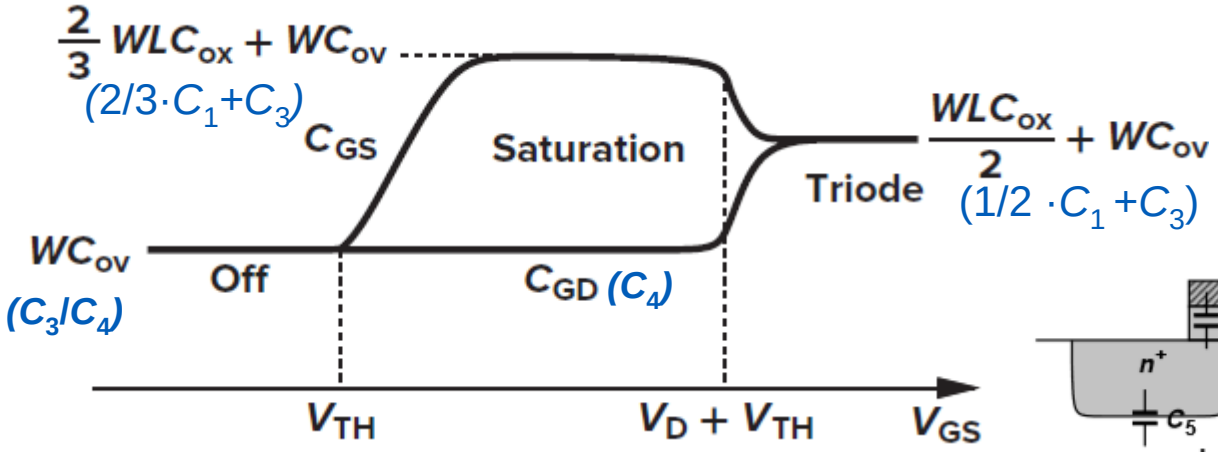

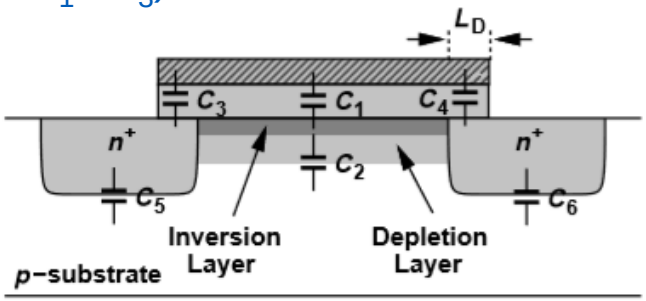

- C_{BS} and C_{BD} are a function of the source and drain voltages with respect to the substrate.
- C_{GB} is usually neglected in triode and saturation regions because the inversion layer acts as a “shield” between the gate and the bulk, so if V_G varies, the charge is supplied by S/D rather than the bulk.

Outline

- Review: Diodes
- MOS I/V Characteristics
- MOS Device Models
  - MOS Device Capacitances
  - MOS Small-signal Models
- MOS Short-Channel Effect
- MOS SPICE Models

MOS Small-Signal Model

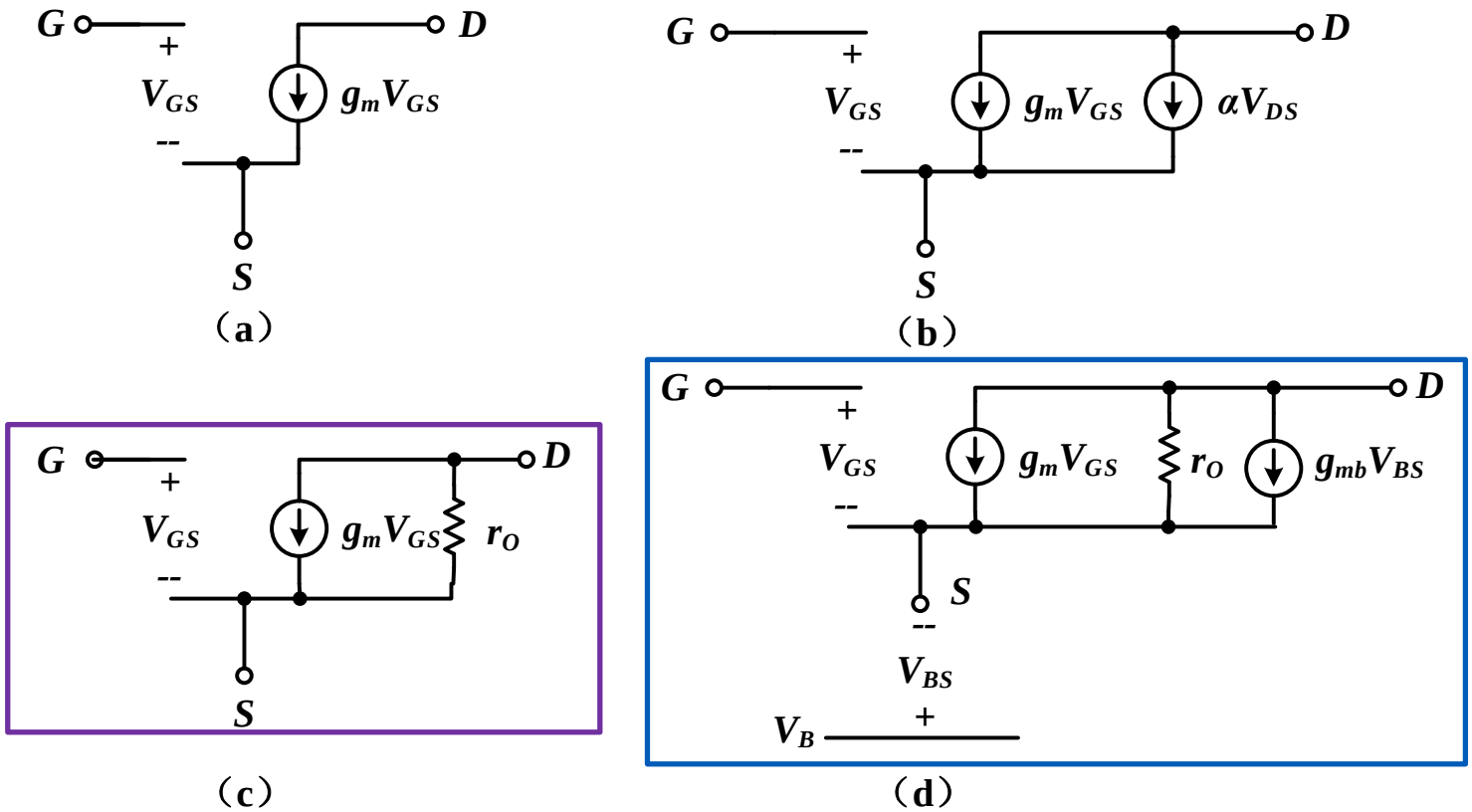

Fig. (a) Basic MOS small-signal model, (b) channel-length modulation represented by a dependent current source, (c) Channel-length modulation represented by a resistor, (d) Body effect represented by a dependent current source.

MOS Small-Signal Model: Parameters

- Transconducance跨导 g_m

$$g_m = \frac{\partial I_D}{\partial V_{GS}}\Big|_{V_{DS},const} = \mu_n C_{ox}\frac{W}{L}(V_{GS}-V_{TH}) = \sqrt{2\mu_n C_{ox}\frac{W}{L}I_D} = \frac{2I_D}{V_{GS}-V_{TH}} \qquad V_{ON} = V_{GS}-V_{TH}$$

- 衬底跨导 g_{mb}

$$g_{mb} = \frac{\partial I_D}{\partial V_{BS}} = \mu_n C_{ox}\frac{W}{L}(V_{GS}-V_{TH})\left(-\frac{\partial V_{TH}}{\partial V_{BS}}\right)$$

g_{mb}和g_m的作用是一致的。

$$\because \frac{\partial V_{TH}}{\partial V_{BS}} = -\frac{\partial V_{TH}}{\partial V_{SB}} = -\frac{\gamma}{2}(2\Phi_F + V_{SB})^{-1/2}$$

$$\therefore \quad g_{mb} = g_m\frac{\gamma}{2\sqrt{2\Phi_F + V_{SB}}} = \eta g_m$$

$$\eta = g_{mb}/g_m$$

$\eta\uparrow \Rightarrow g_{mb}\uparrow,$

$\eta = g_{mb}/g_m \sim 0.1-0.2$

$$V_{TH} = V_{TH0} + \gamma\left(\sqrt{|2\Phi_F + V_{SB}|} - \sqrt{|2\Phi_F|}\right)$$

- **Output resistance r_o in saturation region**

$$ro = \frac{\partial V_{DS}}{\partial I_D} = \frac{1}{\partial I_D/\partial V_{DS}} = \frac{1}{\frac{1}{2}\mu_n C_{ox}\frac{W}{L}(V_{GS}-V_{TH})^2\cdot\lambda} \approx \frac{1}{\lambda I_D} \qquad r_O = \frac{V_E L}{I_{DS}}$$

MOS Small-Signal Model

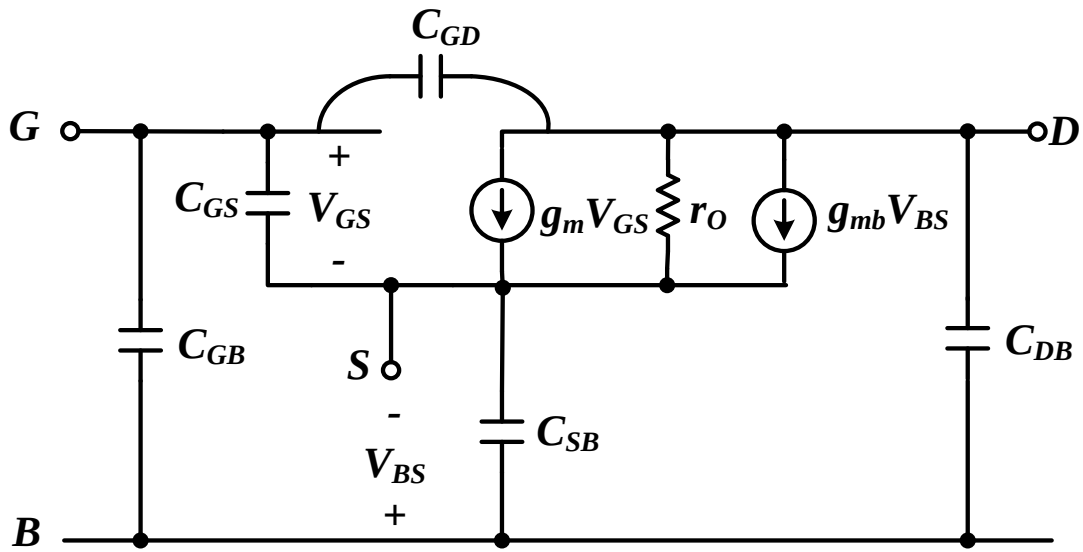

- How to use the model in analyzing a complex circuit intuitively?

  Determine the simplest device model with reasonable accuracy to represent the role of each transistor!

NMOS vs. PMOS

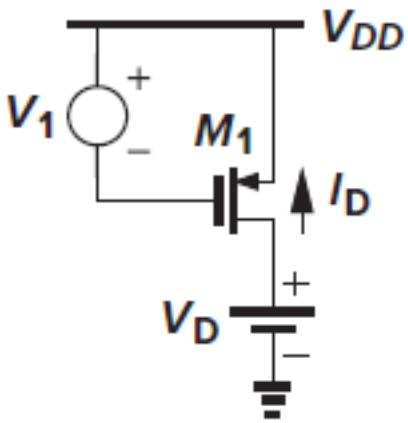

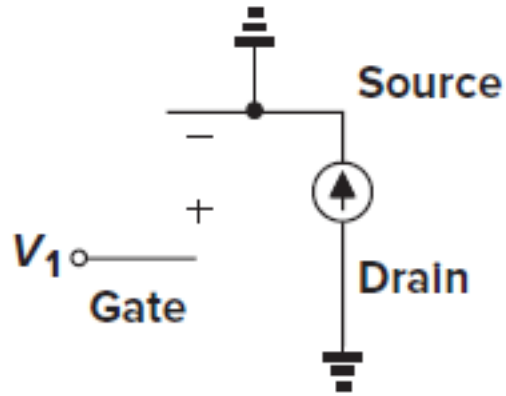

The current in PMOS model is opposite of that in NMOS model

- PMOS devices are quite inferior to NMOS in most CMOS technology.
  - Lower mobility of holes ($\mu_p C_{ox} \approx 1/2 \sim 1/3\ \mu_n C_{ox}$) yield lower current drive and conductance.
- NMOS exhibit higher output resistance, providing more ideal current sources and higher gain in amplifiers.
- As such is it preferred to incorporate NMOS rather than PMOS wherever possible.

MOS SPICE Models – Level 1

Table Level 1 SPICE Models for NMOS and PMOS Devices.

NMOS Model			
LEVEL = 1	VTO = 0.7	GAMMA = 0.45	PHI = 0.9
NSUB = 9e+14	LD = 0.08e-6	UO = 350	LAMBDA = 0.1
TOX = 9e-9	PB = 0.9	CJ = 0.56e-3	CJSW = 0.35e-11
MJ = 0.45	MJSW = 0.2	CGDO = 0.3e-9	JS = 1.0e-8
PMOS Model			
LEVEL = 1	VTO = -0.8	GAMMA = 0.4	PHI = 0.8
NSUB = 5e+14	LD = 0.09e-6	UO = 100	LAMBDA = 0.2
TOX = 9e-9	PB = 0.9	CJ = 0.94e-3	CJSW = 0.32e-11
MJ = 0.5	MJSW = 0.3	CGDO = 0.3e-9	JS = 0.5e-8

VTO: threshold voltage with zero V_{SB} (unit: V); **GAMMA**: body effect coefficient (unit: $V^{1/2}$)
PHI: $2\Phi_F$ (unit: V); **TOX**: gate oxide thickness (unit: m)
NSUB: substrate doping (unit: cm^{-3}) **LD:** source/drain side diffusion (unit: m)
UO: channel mobility (unit: $cm^2/V/s$) **LAMBDA:** channel-length modulation coefficient (unit: V^{-1})
CJ: source/drain bottom-plate junction capacitance per unit area (unit: F/m^2)
CJSW: source/drain sidewall junction capacitance per unit length (unit: F/m)
PB: source/drain junction built-in potential (unit: V)
MJ: exponent in CJ equation (unitless) **MJSW:** exponent in CJSW equation (unitless)
CGDO: gate-drain overlap capacitance per unit width (unit: F/m)
CGSO: gate-source overlap capacitance per unit width (unit: F/m)
JS: source/drain leakage current per unit area (unit: A/m^2)

Outline

- Review: Diodes
- MOS I/V Characteristics
- MOS Device Models
- MOS Short-Channel Effect
  - Scaling Theory
  - Short-channel Effects:

    Carrier Mobility Degradation, Hot-Carrier Effect
- MOS SPICE Models

Reference:

Chapter 17, <Design of Analog CMOS Integrated Circuits>Razavi著

Scaling-down按比例缩小

- The square-law characteristics for MOSFETs provide moderate accuracies for devices with minimum channel lengths of greater than several microns.
- As device dimensions continue to scale down, higher order effects necessitate more complex models.

The two principal reasons for the dominance of CMOS technology in today's semiconductor industry: 1) the zero static power dissipation of CMOS logic;
2) the scalability of MOSFETs.

Scaling theory

(1) reduce all lateral and vertical dimensions by α (>1) W, L, t_{ox}, x_j, …… density↑α^2

(2) reduce the threshold voltage and the supply voltage by *α* V_{DD}, V_{TH}

(3) increase all of the doping levels by α n^+, p^+ ⇨ ***Constant-field scaling***

I_D/α, $C_{channel}/\alpha$ =>speed ↑α P/α^3,

g_m不变, $g_m r_O$不变**(实际上变小)**

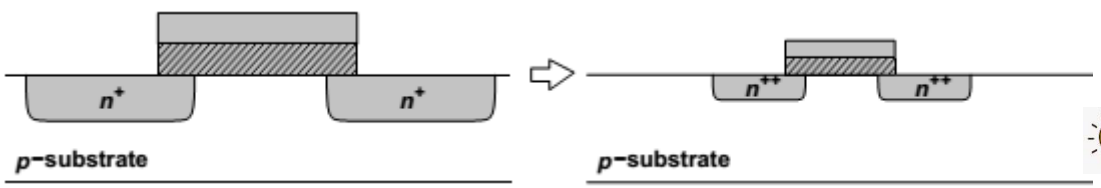

V_{DD}/α =〉 DR/α, P/α^2

⇨ ***Constant-voltage scaling***

尺寸减小α倍，掺杂浓度增大α倍，电压不变

Short-Channel Effect

Reasons:

- The electric fields increase ⇦ supply voltage has not scaled proportionally.
- The built-in potential term Φ_B is neither scalable nor negligible.
- The depth of S/D junctions cannot be reduced easily.
- The mobility decreases as the substrate doping increases.
- The subthreshold slope (described below) is not scalable.

Short-Channel Effect:

- Threshold voltage variation
  - Effect of channel length on threshold
  - Drain-induced barrier lowering (DIBL)
  - Reverse Short-Channel Effect
- Output impedance variation with V_{DS}
- **Mobility degradation and velocity saturation**
- **Hot carrier effect**
- ……

Carrier Mobility Degradation

- **Zero Field Mobility**

$$\mu = \frac{v}{E}$$

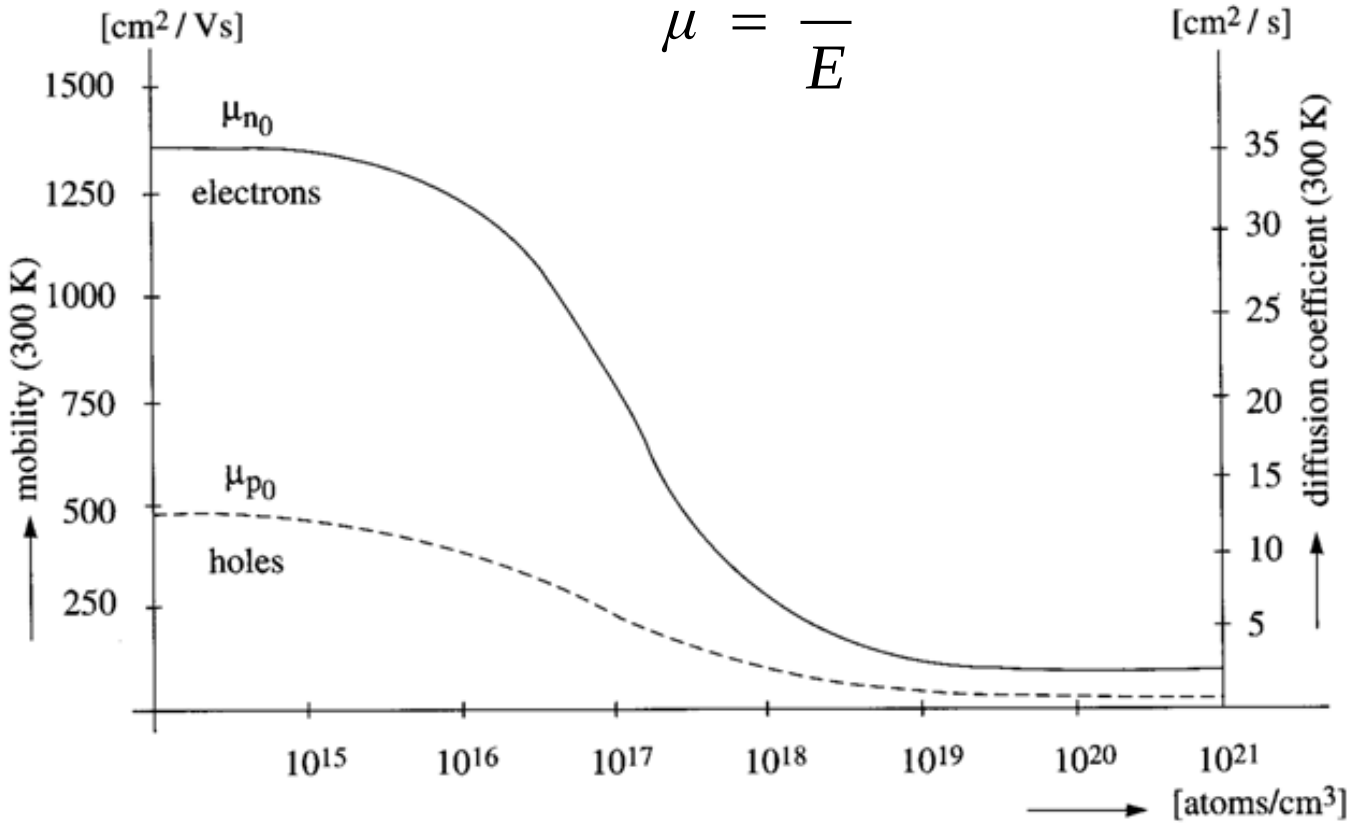

Carrier mobility and diffusion coefficient
as a function of doping concentration in silicon at room temperature

Carrier Mobility Degradation- Temp dependence

- **Temperature-Dependence Carrier Mobility Degradation**

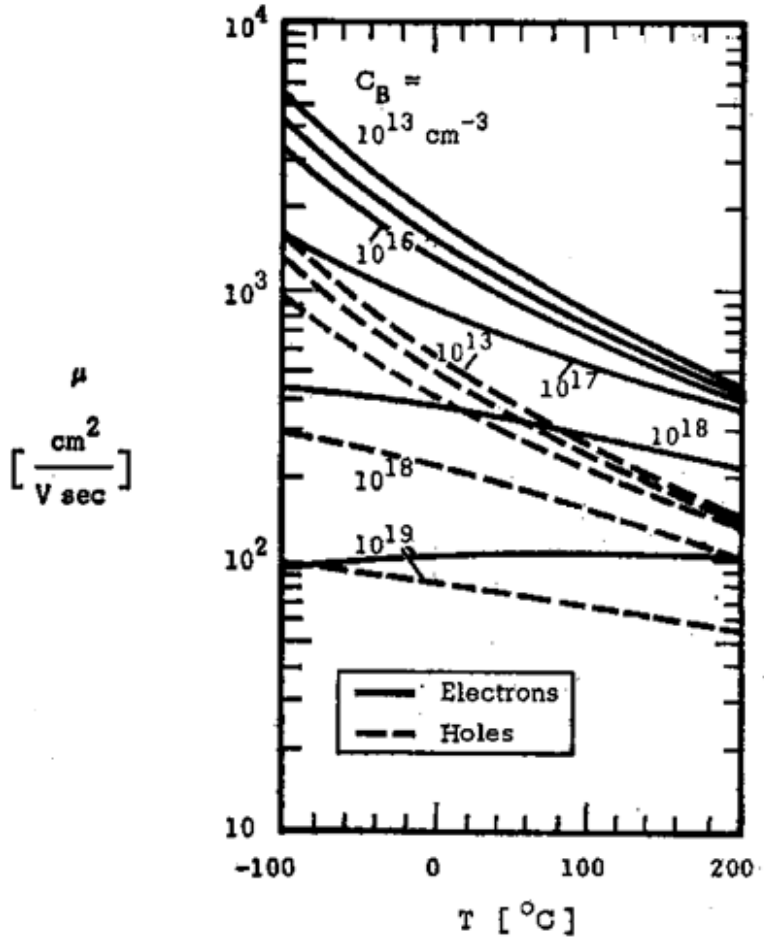

$$\mu(T) = \mu_0(T_0)\cdot\left(\frac{T}{T_0}\right)^{-m}$$

$$m = 1.2 \sim 1.6 \quad 1.5$$

$$K'(T) = K'(298K)\cdot\left(\frac{298K}{T}\right)^{3/2}$$

$$\boxed{\frac{\partial(V_{TH})}{\partial T} \approx -2 \sim 3mV/^{\circ}C}$$

Carrier Mobility Degradation- Vertical Field

- At large V_{GS}, the high electric field between the gate and the channel confines the charge carries to a narrow region below the oxide-silicon interface ⇨ more carrier scattering and lower mobility

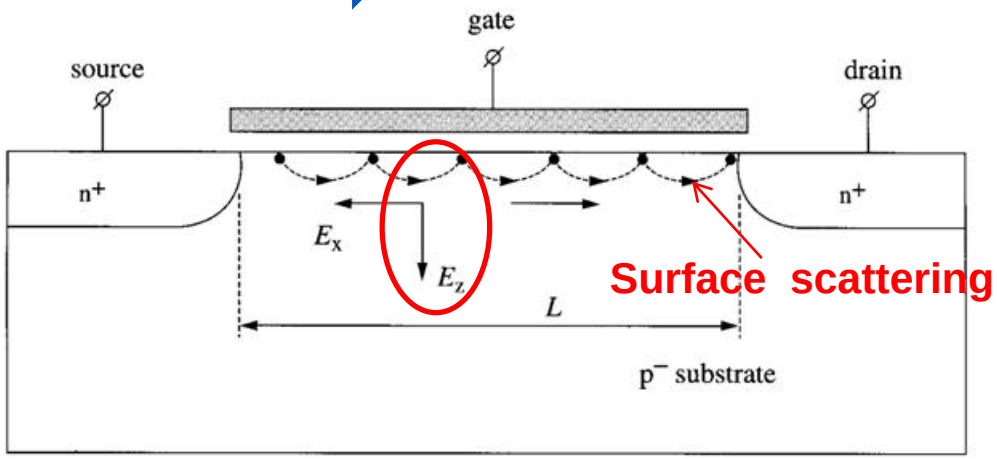

$$\mu_{eff} = \frac{\mu_0}{1+\theta(V_{GS}-V_{TH})}$$

where θ is constants.

lowering I_D and g_m

$$I_D = \frac{1}{2}\frac{\mu_0 C_{ox}}{1+\theta(V_{GS}-V_{TH})}\frac{W}{L}(V_{GS}-V_{TH})^2$$

$\theta(V_{GS}-V_{TH}) \ll 1$ ⇩

$$\begin{aligned} I_D &\approx \frac{1}{2}\mu_0 C_{ox}\frac{W}{L}[1-\theta(V_{GS}-V_{TH})](V_{GS}-V_{TH})^2 \\ &\approx \frac{1}{2}\mu_0 C_{ox}\frac{W}{L}[(V_{GS}-V_{TH})^2-\theta(V_{GS}-V_{TH})^3]. \end{aligned}$$

the existence of higher harmonics in the drain current.

Carrier Mobility Degradation- Velocity saturation

Lateral Field

$$E = \frac{\mu_n}{2 v_{sat} L}$$

E_X=1V/μm v_{sat}=10^7cm/s

$$I_D = v_{sat} Q_d = v_{sat} W C_{OX} \left(V_{GS} - V_{TH}\right)$$

线性！与L无关！

$$g_m = v_{sat} W C_{OX}$$ **恒定！**

!!! Never enter the high-current or velocity saturation region

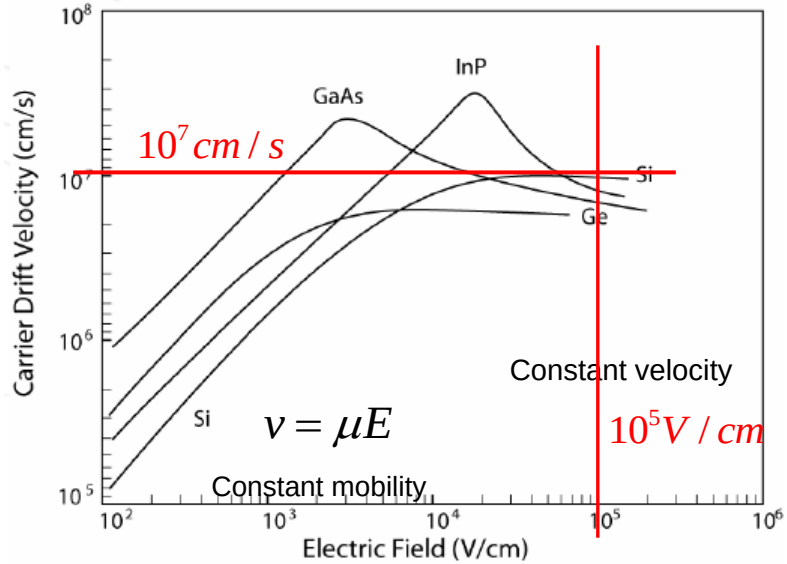

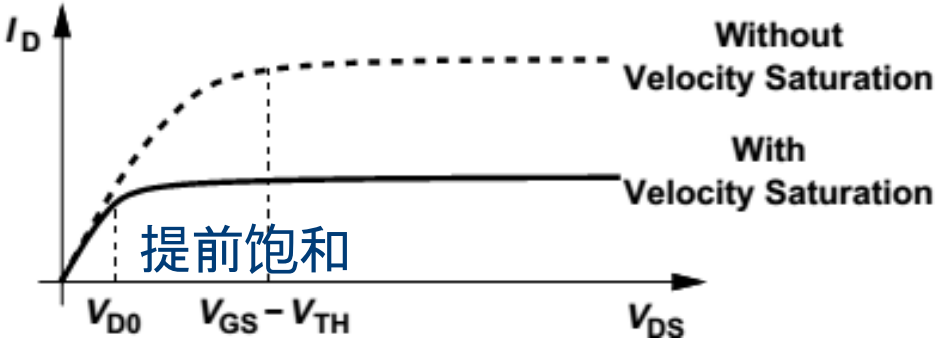

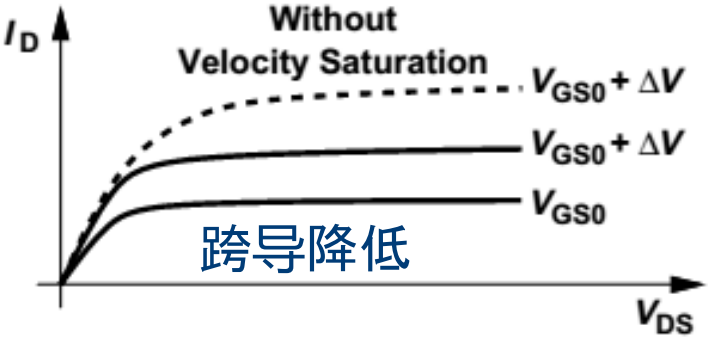

Saturation region vs. velocity saturation

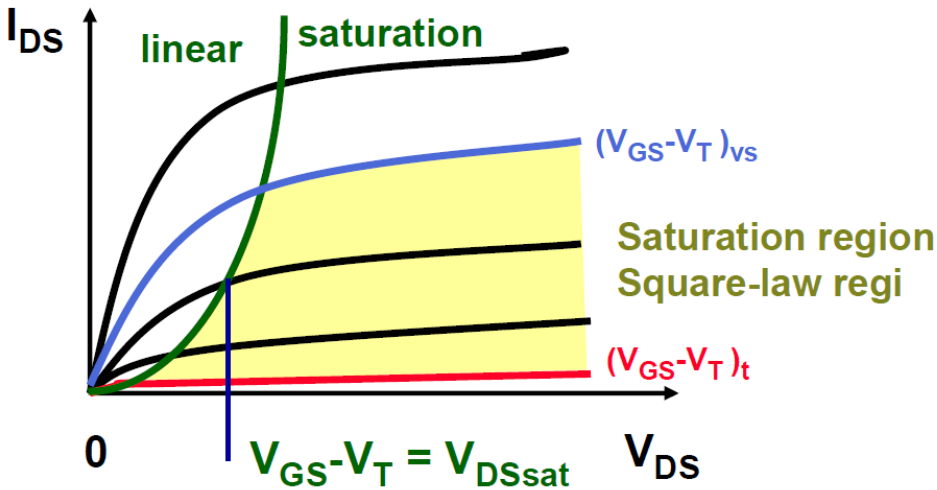

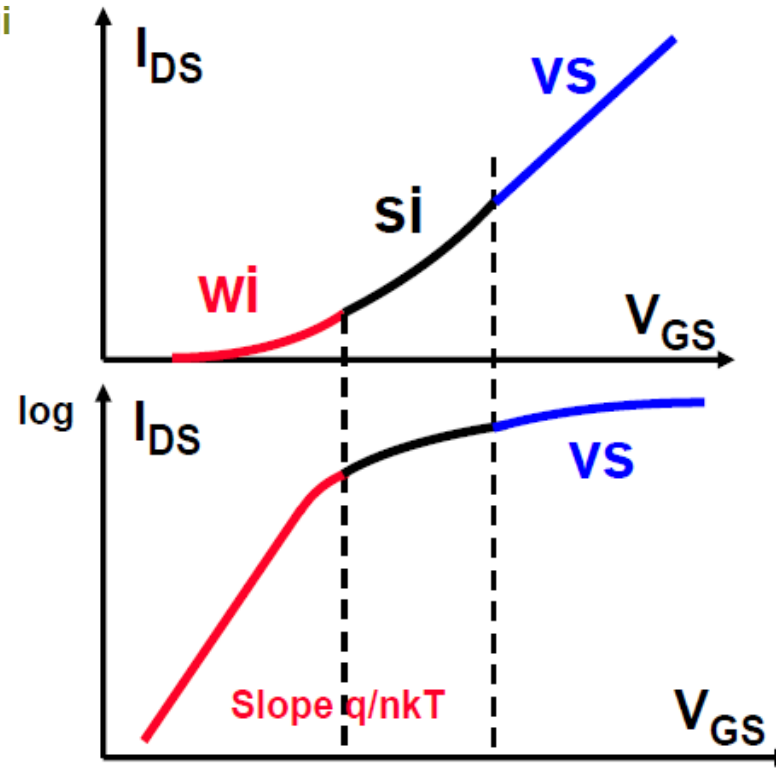

Velocity Saturation $$I_{DS} = v_{sat} W C_{ox} \left(V_{GS} - V_{TH}\right)$$

Strong Inversion $$I_{DS} = \frac{1}{2} \mu_n C_{OX} \frac{W}{L} \left(V_{GS} - V_{TH}\right)^2$$

Weak Inversion $$I_{DS} = I_0 \exp \frac{V_{GS}}{nkT/q}$$

Appendix: wi, si, vs

TIPS:	High gain	High speed
V_{GS}-V_T	Low (0.2 V)	High (0.5 V)
L	High	Low

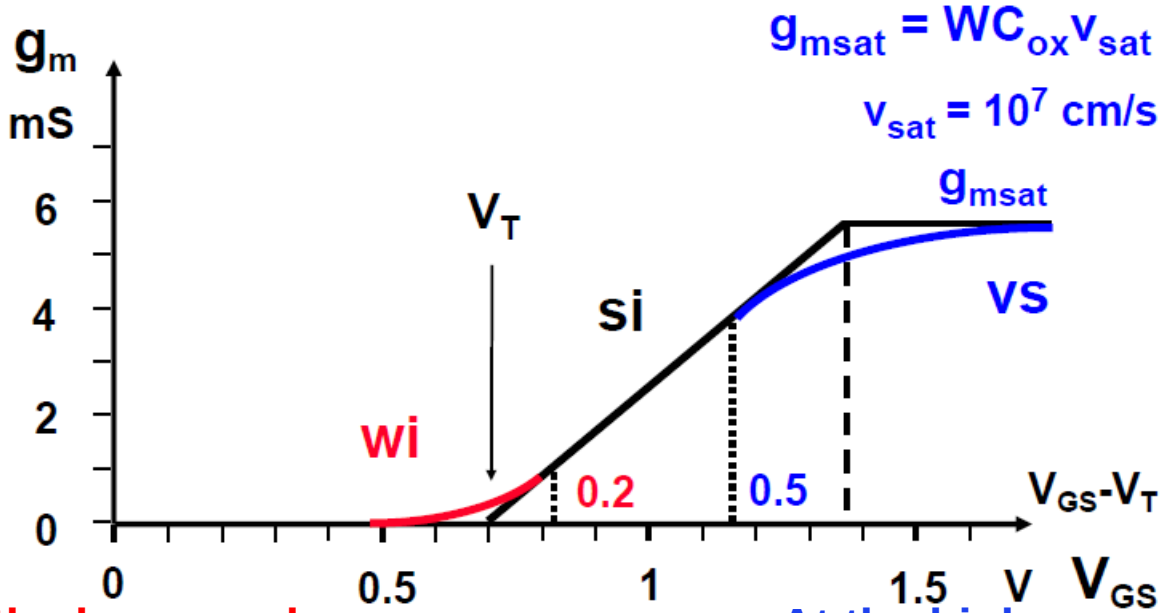

$g_{msat} = WC_{ox}v_{sat}$

$v_{sat} = 10^7$ cm/s

At the lower end,
work close to weak inversion but not in it.

At the higher end,
do not enter the high-current or velocity-saturation region.

transition point: $V_{GS} - V_{TH} = 2\zeta V_T \approx 80$mV(wi and si) $V_{GS} - V_{TH} = 5L$(si and vs)

Hot-Carrier Effect

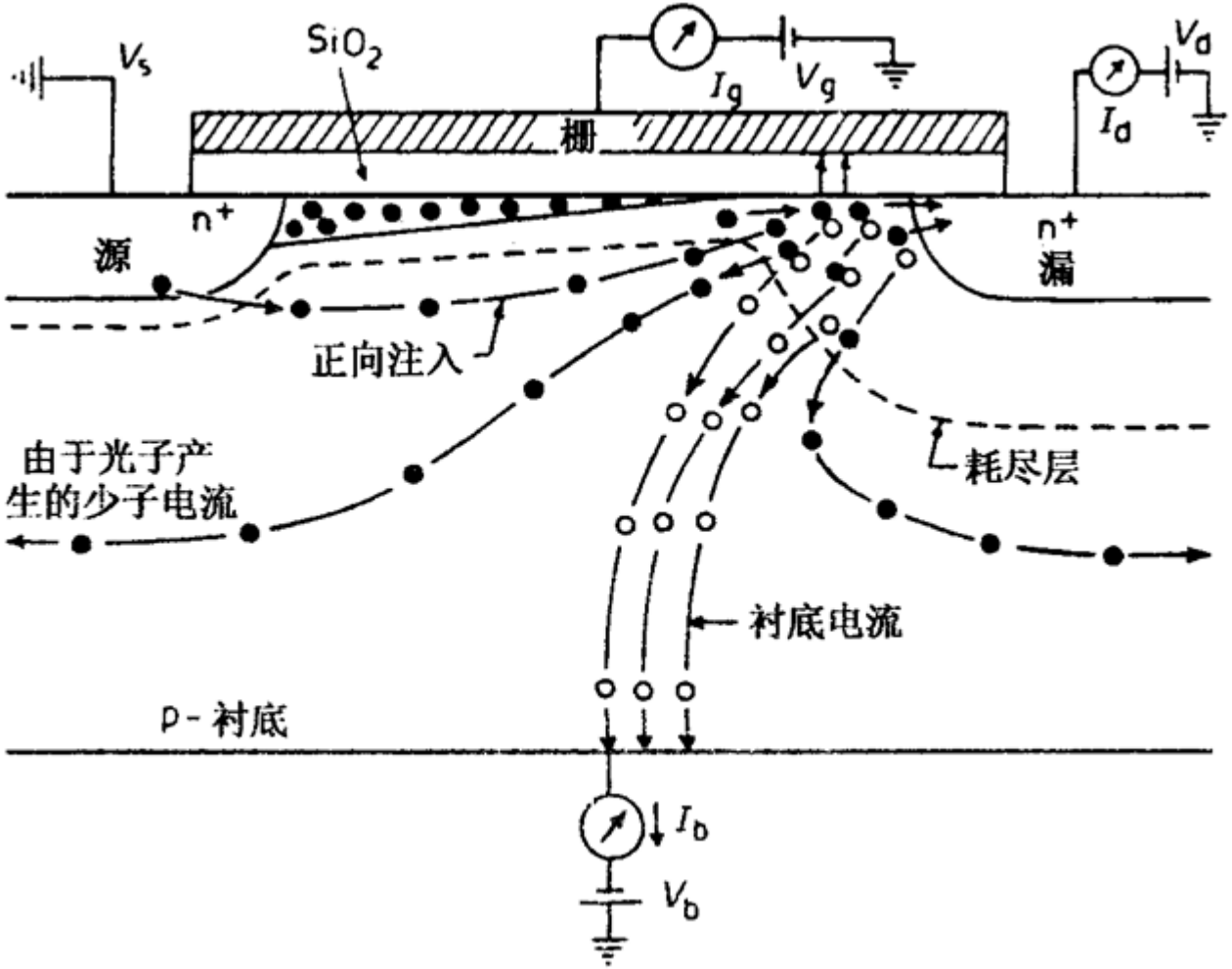

Outline

- Review: Diodes
- MOS I/V Characteristics
- MOS Device Models
- MOS Short-Channel Effect
- MOS SPICE Models（自学）
  - Process Corner

SPICE and Models

- **Simulation Program with Integrated Circuit Emphasis**

<= CANCER (**Computer Analysis of Nonlinear Circuits, Excluding Radiation**)

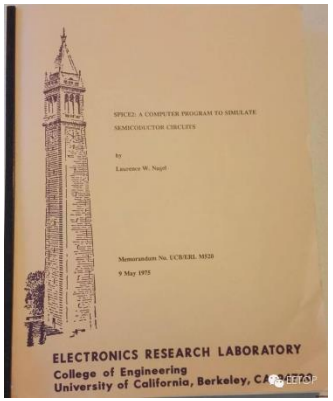

- Prof. Ron Rohrer, Prof. Peterson
- SPICE2 : Nagel等7人

  SPICE2G6: Ellis, Nagel的室友

  SPICE3: Quarles, 增加了用户图像界面 。。。
- 开源代码的先驱
- 求解含有非线性器件的电路方程
  - ✓ 改进的节点分析法
  - ✓ 稀疏矩阵求解
  - ✓ 牛顿-拉夫逊迭代
  - ✓ 隐形数值积分
  - ✓ 动态补偿的瞬态分析
  - ✓ 。。。。。。

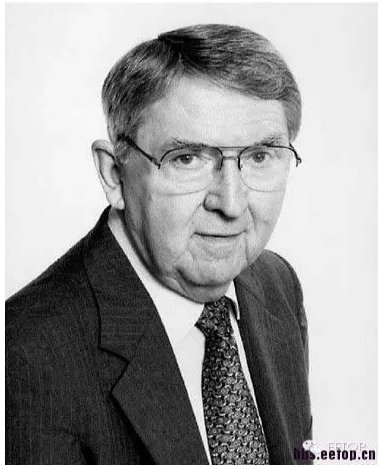

SPICE Simulator

- HSPICE: Meta-software -> Avant!(1996) -> Synopsys (2001)
- PSPICE (PC SPICE): MicroSim -> OrCAD (1998) -> Cadence(2000)
- Spectre/Spectre-RF: Cadence
- Smart-Spice: Silvaco
- APLS: 华大九天

Types of Simulator

- SPICE级仿真工具
  - aps(Cadence)，Hspice(Synopsys)，finesim spice(Synopsys)，ALPS-AS(Empyrean)
  - 适合求解对精度要求高的模拟电路。
- Fast SPICE级仿真工具
  - hsim(Synopsys)，XA(Synopsys)，finesim pro(Synopsys)，XPS(Cadence)，ultrasim(Cadence)
  - 速度快、精度有损失
  - 数字电路
- 混合信号仿真工具
  - AMS Designer(Cadence)，ALPS-MS(Empyrean)
  - SPICE+数字仿真器（如Synopsys的VCS，Cadence的NC，Mentor的Modelsim）连在一起运行
- 。。。。。

MOS SPICE Models

- **Level 1: Shichman-Hodges Model**

$$\begin{cases} i_D = \dfrac{\mu_0 C_{OX} W}{L}\left[(V_{GS}-V_{TH})V_{GS}-\dfrac{V_{DS}}{2}\right]V_{DS}(1+\lambda V_{DS}) & (0 \le V_{DS} \le V_{GS}-V_{TH}) \\ i_D = \dfrac{1}{2}\dfrac{\mu_0 C_{OX} W}{L}(V_{GS}-V_{TH})^2(1+\lambda V_{DS}) & (0 \le V_{GS}-V_{TH} \le V_{DS}) \\ i_D = 0 \quad (V_{GS} < V_{TH}) \end{cases}$$

$$V_{TH} = V_{TH0} + \gamma\left(\sqrt{2|\phi_F| + v_{SB}} - \sqrt{2|\phi_F|}\right) \qquad L_{eff} = L - 2L_D$$

- NOTE:
  - The model does not include subthreshold conduction or any short-channel effects.
  - C_{GS} abruptly changes from (2/3)*WLC*ox + *WC*ov in saturation to (1/2)*WLC*ox + *Wc*ov in the triode region most computation algorithms experience convergence difficulties here

MOS SPICE Models – Level 1

Table Level 1 SPICE Models for NMOS and PMOS Devices.

NMOS Model			
LEVEL = 1	VTO = 0.7	GAMMA = 0.45	PHI = 0.9
NSUB = 9e+14	LD = 0.08e-6	UO = 350	LAMBDA = 0.1
TOX = 9e-9	PB = 0.9	CJ = 0.56e-3	CJSW = 0.35e-11
MJ = 0.45	MJSW = 0.2	CGDO = 0.3e-9	JS = 1.0e-8
PMOS Model			
LEVEL = 1	VTO = -0.8	GAMMA = 0.4	PHI = 0.8
NSUB = 5e+14	LD = 0.09e-6	UO = 100	LAMBDA = 0.2
TOX = 9e-9	PB = 0.9	CJ = 0.94e-3	CJSW = 0.32e-11
MJ = 0.5	MJSW = 0.3	CGDO = 0.3e-9	JS = 0.5e-8

VTO: threshold voltage with zero V_{SB} (unit: V); **GAMMA**: body effect coefficient (unit: $V^{1/2}$)
PHI: $2\Phi_F$ (unit: V); **TOX**: gate oxide thickness (unit: m)
NSUB: substrate doping (unit: cm^{-3}) **LD:** source/drain side diffusion (unit: m)
UO: channel mobility (unit: $cm^2/V/s$) **LAMBDA:** channel-length modulation coefficient (unit: V^{-1})
CJ: source/drain bottom-plate junction capacitance per unit area (unit: F/m^2)
CJSW: source/drain sidewall junction capacitance per unit length (unit: F/m)
PB: source/drain junction built-in potential (unit: V)
MJ: exponent in CJ equation (unitless) **MJSW:** exponent in CJSW equation (unitless)
CGDO: gate-drain overlap capacitance per unit width (unit: F/m)
CGSO: gate-source overlap capacitance per unit width (unit: F/m)
JS: source/drain leakage current per unit area (unit: A/m^2)

MOS SPICE Models – Level 2, 3, …

- Level 2: Physics model
- Level 3: Semi-theoretical & Semi-empirical model
- BSIM (*Berkeley Short Channel IGFET Model*)
  - 胡正明教授(Prof. Chenmin Hu) - **FinFET**
  - numerous empirical parameters: simplify the equations, but at the cost of losing touch with the actual device operation.
  - a simple equation to represent the geometry dependence of many of the device parameters.

$$P = P_0 + \frac{\alpha_P}{L_{eff}} + \frac{\beta_P}{W_{eff}}$$

- http://www-device.eecs.berkeley.edu

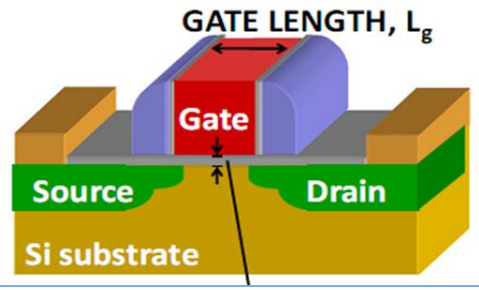

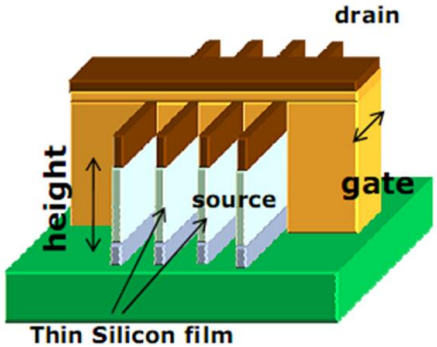

Planar MOSFET(2D)

FinFET(3D)

Compare of MOS Models

Performance Comparison of Models (from Cheng and Hu, *MOSFET Modeling & BSIM3 Users Guide*)

Model	Minimum L (μm)	Minimum Tox (nm)	Model Continuity	i_D Accuracy in Strong Inversion	i_D Accuracy in Subthreshold	Small signal parameter	Scalability
MOS1	5	50	Poor	Poor	Not Modeled	Poor	Poor
MOS2	2	25	Poor	Poor	Poor	Poor	Fair
MOS3	1	20	Poor	Fair	Poor	Poor	Poor
BSIM1	0.8	15	Fair	Good	Fair	Poor	Fair
BSIM2	0.35	7.5	Fair	Good	Good	Fair	Fair
BSIM3v2	0.25	5	Fair	Good	Good	Good	Good
BSIM3v3	0.15	4	Good	Good	Good	Good	Good

BSIM4v5

Example of BSIM (NMOS)

```
.MODEL CMOSN NMOS (                                LEVEL   = 49
+VERSION = 3.1            TNOM    = 27             TOX     = 7.7E-9
+XJ      = 1E-7           NCH     = 2.2E17         VTH0    = 0.5121595
+K1      = 0.5552701      K2      = 0.0186698      K3      = 0.0538742
+K3B     = -10            W0      = 1.205177E-5    NLX     = 1.908819E-7
+DVT0W   = 0              DVT1W   = 0              DVT2W   = 0
+DVT0    = 3.9538405      DVT1    = 0.8598993      DVT2    = -0.1996874
+U0      = 432.4300555    UA      = -2.98252E-12   UB      = 1.600316E-18
+UC      = 4.087818E-11   VSAT    = 1.926227E5     A0      = 1.2168698
+AGS     = 0.1792583      B0      = 1.066995E-6    B1      = 5E-6
+KETA    = 5.364714E-3    A1      = 0              A2      = 0.3684583
+RDSW    = 812.3404098    PRWG    = 0.0657941      PRWB    = -0.0938282
+WR      = 1              WINT    = 6.735212E-8    LINT    = 0
+XL      = -2E-8          XW      = 0              DWG     = -6.735256E-9
+DWB     = 3.548415E-9    VOFF    = -0.078735      NFACTOR = 1.2829312
+CIT     = 0              CDSC    = 2.4E-4         CDSCD   = 0
+CDSCB   = 0              ETA0    = 1              ETAB    = 6.277321E-3
+DSUB    = 0.7952596      PCLM    = 1.4453347      PDIBLC1 = 5.21245E-4
+PDIBLC2 = 4.731652E-3    PDIBLCB = 0.0785725      DROUT   = 0.0413584
+PSCBE1  = 5.072986E8     PSCBE2  = 1.787904E-5    PVAG    = 0
+DELTA   = 0.01           RSH     = 3.2            MOBMOD  = 1
+PRT     = 0              UTE     = -1.5           KT1     = -0.11
+KT1L    = 0              KT2     = 0.022          UA1     = 4.31E-9
+UB1     = -7.61E-18      UC1     = -5.6E-11       AT      = 3.3E4
+WL      = 0              WLN     = 1              WW      = 0
+WWN     = 1              WWL     = 0              LL      = 0
+LLN     = 1              LW      = 0              LWN     = 1
+LWL     = 0              CAPMOD  = 2              XPART   = 0.5
+CGDO    = 2.78E-10       CGSO    = 2.78E-10       CGBO    = 1E-12
```

Example of BSIM (PMOS)

```
.MODEL CMOSP PMOS (                                LEVEL   = 49
+VERSION = 3.1            TNOM    = 27             TOX     = 7.7E-9
+XJ      = 1E-7           NCH     = 8.52E16        VTH0    = -0.6603971
+K1      = 0.4594954      K2      = -0.0165827     K3      = 88.8977872
+K3B     = -5             W0      = 7.515625E-6    NLX     = 2.511816E-7
+DVT0W   = 0              DVT1W   = 0              DVT2W   = 0
+DVT0    = 1.4472839      DVT1    = 0.4769835      DVT2    = -0.0167159
+U0      = 157.2254632    UA      = 1E-10          UB      = 2.103088E-18
+UC      = -1.49211E-11   VSAT    = 2E5            A0      = 1.0641153
+AGS     = 0.3707576      B0      = 2.412043E-6    B1      = 5E-6
+KETA    = -7.666067E-3   A1      = 0              A2      = 0.3
+RDSW    = 3.484979E3     PRWG    = -0.1230866     PRWB    = 0.0388117
+WR      = 1              WINT    = 7.093263E-8    LINT    = 0
+XL      = -2E-8          XW      = 0              DWG     = -1.8394E-8
+DWB     = 1.055952E-8    VOFF    = -0.1190324     NFACTOR = 2
+CIT     = 0              CDSC    = 2.4E-4         CDSCD   = 0
+CDSCB   = 0              ETA0    = 0.1127394      ETAB    = 0.0173484
+DSUB    = 0.7008224      PCLM    = 4.0197889      PDIBLC1 = 9.251931E-3
+PDIBLC2 = 2.748506E-3    PDIBLCB = 0.0131404      DROUT   = 0.0594943
+PSCBE1  = 8E10           PSCBE2  = 5.024895E-10   PVAG    = 3.459432
+DELTA   = 0.01           RSH     = 2.5            MOBMOD  = 1
+PRT     = 0              UTE     = -1.5           KT1     = -0.11
+KT1L    = 0              KT2     = 0.022          UA1     = 4.31E-9
+UB1     = -7.61E-18      UC1     = -5.6E-11       AT      = 3.3E4
+WL      = 0              WLN     = 1              WW      = 0
+WWN     = 1              WWL     = 0              LL      = 0
+LLN     = 1              LW      = 0              LWN     = 1
+LWL     = 0              CAPMOD  = 2              XPART   = 0.5
+CGDO    = 2.96E-10       CGSO    = 2.96E-10       CGBO    = 1E-12
```

Growing number of parmeters

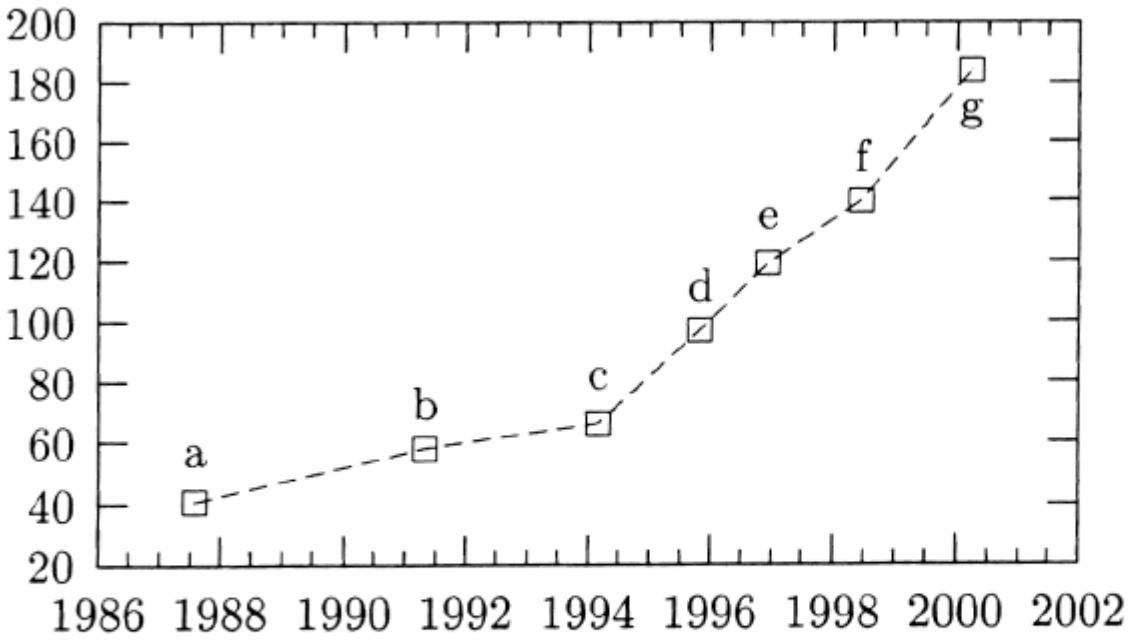

a: BSIM1
b: BSIM2
c: BSIM3 version 2.0
d: BSIM3 version 3.0
e: BSIM3 version 3.1
f: BSIM3 version 3.2.2
g: BSIM4.0.0

BSIM4 : http://www-device.eecs.berkeley.edu/bsim/bsim_ent.html
Model 11 : http://www.semiconductors.philips.com/Philips_Models/mos_models/model11/index.html
EKV : http://legwww.epfl.ch/ekv/model.html

Process Corner(工艺角)

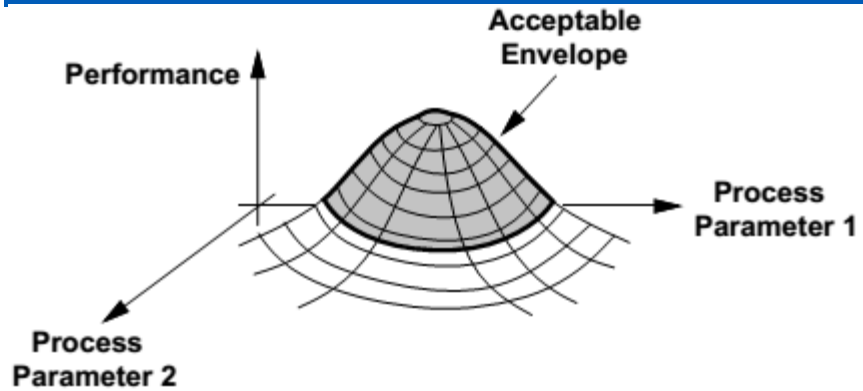

- Process engineers guarantee a performance envelope for the devices.
- The idea is to constrain the speed envelope of the NMOS/PMOS transistors to a rectangle defined by four corners – called process corners.

Process corners based on speed of NMOS and PMOS devices

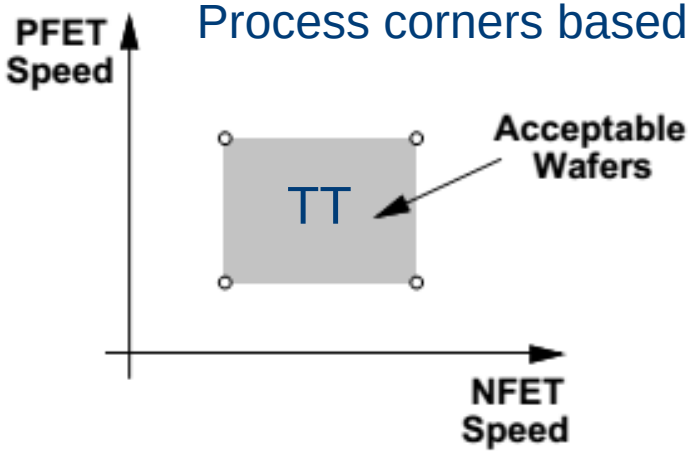

S: slow
F: fast
T: typical

TT, FF, FS, SS, SF

Outline

- Review: Diodes
- MOS I/V Characteristics
- MOS Device Models
- MOS Short-Channel Effect
- MOS SPICE Models

Summary

- Model philosophy for IC design
  - Use simple models for design and sophisticated model for verification
- Models have several parts
  - Large signal static (DC variables)
  - Small signal static (gains, input/output resistances)
  - Small signal dynamic (frequency response, noise略)
  - Large signal dynamic (slew rate略)
  - In addition models may include
    - Temperature
    - Noise (略)
    - Process variations (Monte Carlo method 略)
- Computer models
  - Must be numerically efficient
  - Quickly derived from new technology

Analog Design “Tricks”:
Stay away from minimum channel length if possible
⇨ Larger r_o -> large gains better agreement
Don’t use the computer models for design, rather verification of design

集成电路原理与设计
4.器件模型二

赵梦恋
zhaoml@zju.edu.cn

Single-Page MOSFET Model

$$I_{DS} = K'_n \frac{W}{L} (V_{GS}-V_T)^2$$

$V_{GS}-V_T \approx 0.2$ V

$$K'_n = \frac{1}{2}\mu_n C_{ox}$$

$K'_n \approx 100\ \mu A/V^2$

$K'_p \approx 40\ \mu A/V^2$

$$g_m = 2K'_n \frac{W}{L} (V_{GS}-V_T) = 2\sqrt{K'_n \frac{W}{L} I_{DS}} = \frac{2\, I_{DS}}{V_{GS}-V_T}$$

$$r_{DS} = r_o = \frac{V_E L}{I_{DS}}$$

$$r_O = \frac{1}{I_D \lambda}$$

$V_{En} \approx 5$ V/μmL $V_{Ep} \approx 8$ V/μmL

$v_{sat} = 10^7$ cm/s

$$f_T = \frac{1}{2\pi}\frac{3}{2n}\frac{\mu}{L^2}(V_{GS}-V_T) \quad \text{or now} \approx \frac{v_{sat}}{2\pi L}$$

$$f_T = \frac{g_m}{2\pi C_{GS}}$$

Appendix: Single-page Bipolar Transistor Model

$$I_{CE} = I_S \exp^{\frac{V_{BE}}{kT/q}}$$

$I_S \approx 10^{-15}$ A kT/q = 26 mV at 300 K

$$g_m = \frac{I_{CE}}{kT/q} \qquad r_o = \frac{V_E}{I_{CE}}$$

$V_{En} \approx 20$ V $V_{Ep} \approx 10$ V

$$f_T = \frac{1}{2\pi} \frac{1}{\tau_F + \frac{C_{je}+C_{jc}}{g_m}}$$

$$\text{or} \approx \frac{v_{sat}}{2\pi W_B}$$

Willy Sansen 10-05 0182

Appendix: FinFETs

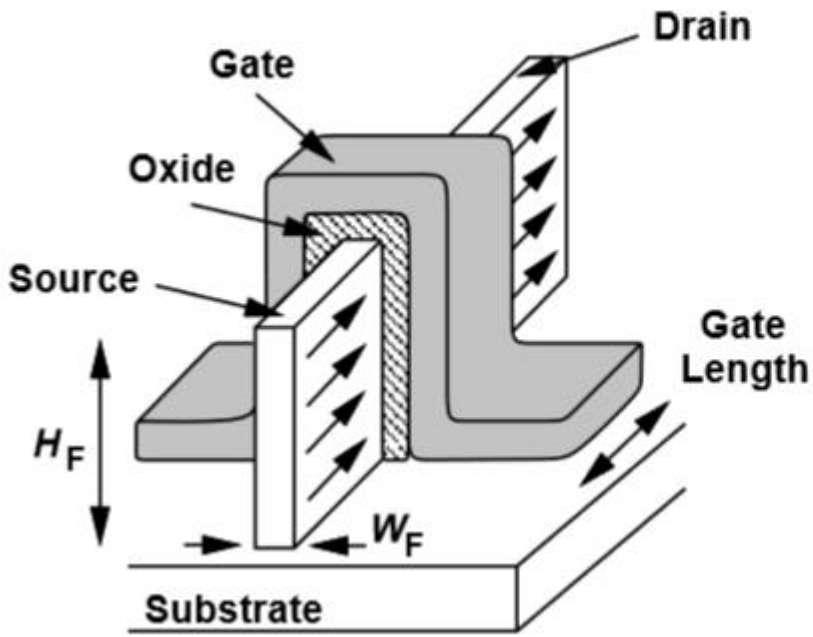

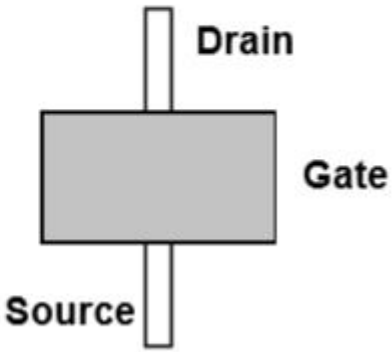

- FinFETs have three-dimensional geometry and exhibit superior performance as channel lengths fall below ~20 nm.
- Here, $W = W_F + 2H_F$, but since H_F is not under the circuit designer's control and W_F, impacts device imperfections, there are only discrete values for transistor width.

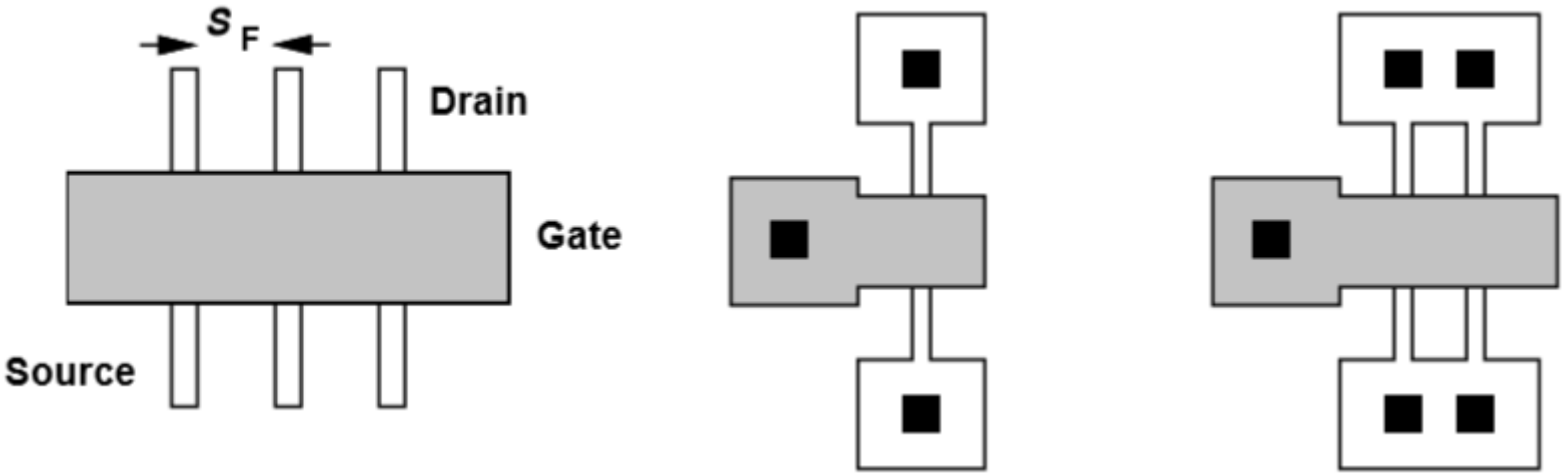

- Spacing between fins, S_F, also plays a significant role in performance and is typically fixed.
- Due to small dimensions of the intrinsic FinFET, the gate and S/D contacts must be placed away from the core of the device.

Appendix: SPICE Simulation of MOS Circuit

M<number> <DRAIN> <GATE> <SOURCE> <BULK> modelname parameters

Example：M1 3 6 7 0 NCH W=100u L=1u

.MODEL <modelname> <model type> <model parameters>

convergence

ABSTOL default value 1pA

VNTOL default value 1uV

RELTOL default value 0.001(0.1%)

Example:

.OPTIONS ABSTOL=1uA VNTOL=1mV RELTOL=0.01

Cost: Accuracy

Example

Use of SPICE to simulate MOS output characteristics

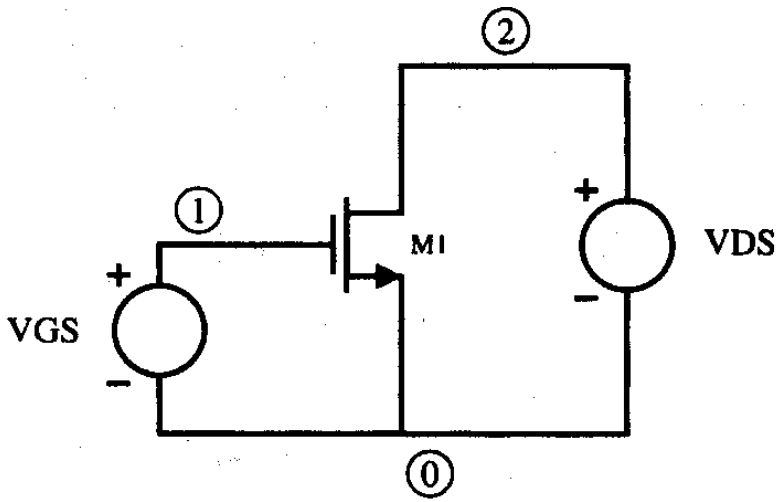

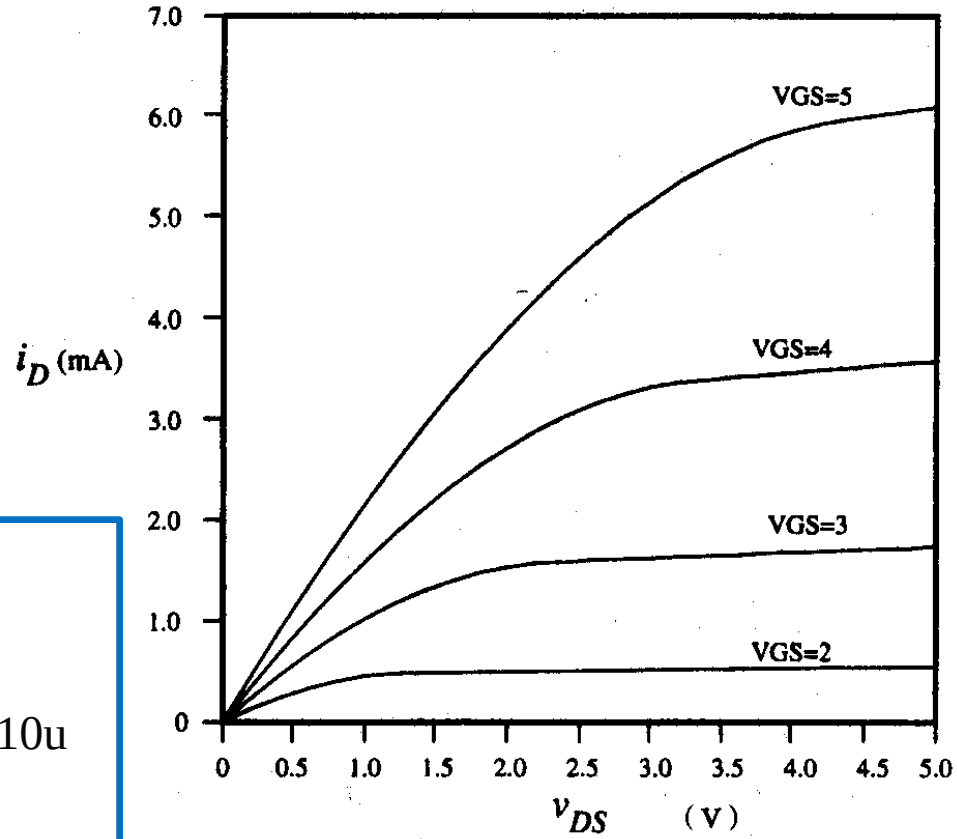


```
M1        2  1  0  0 MOS1 w=5u l=1.0u
VDS       2  0  5
VGS       1  0  1
.model    MOS1 NMOS VT0=0.7 KP=110u
GAMMA=0.4 LAMBDA=0.04 PHI=0.7
.dc VDS 0  5  0.2  VGS  1 5  1
.print DC V(2)  I(VDS)
.end
```

Example

DC Analysis of Fig.
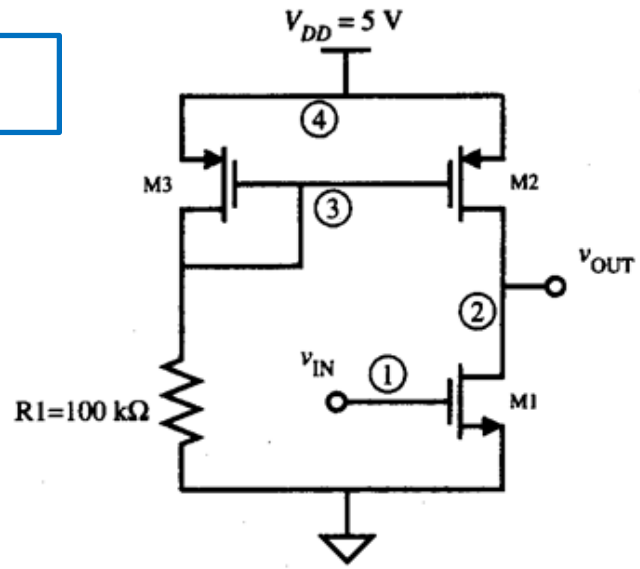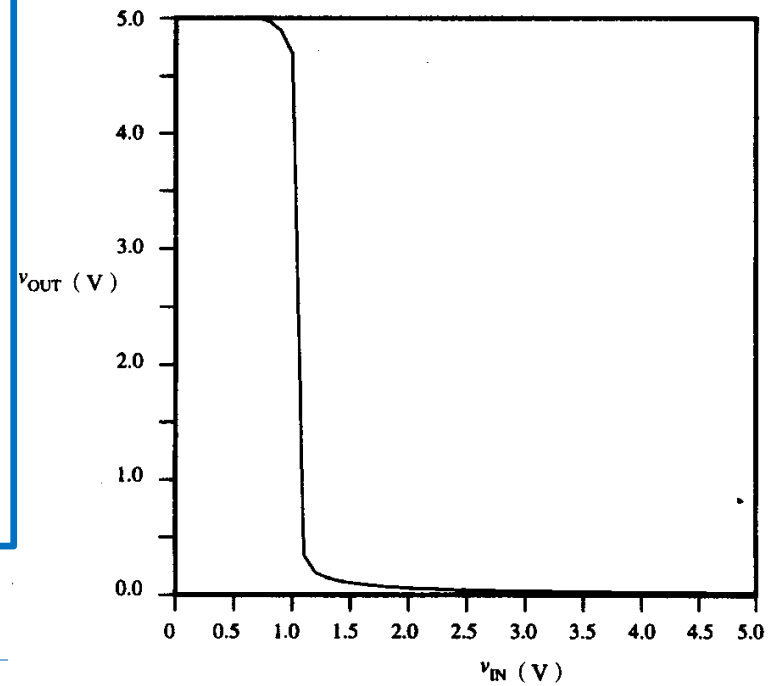
```
EX. DC Analysis of Fig. 2.48.
M1      2  1  0  0 MOSN w=5u l=1.0u
M2      2  3  4  4 MOSP w=5u l=1.0u
M3      3  3  4  4 MOSP w=5u l=1.0u
R1      3  0  100k
VDD     4  0  DC  5.0
VIN     1  0 DC  5.0
.model MOSN NMOS VT0=0.7 KP=110u
GAMMA=0.4 LAMBDA=0.04 PHI=0.7
.model MOSP  PMOS VT0=-0.7 KP=50u
GAMMA=0.57 LAMBDA=0.05 PHI=0.8
.dc VIN  0  5  0.1
.print DC V(2)
.end
```